ROHS Compatible

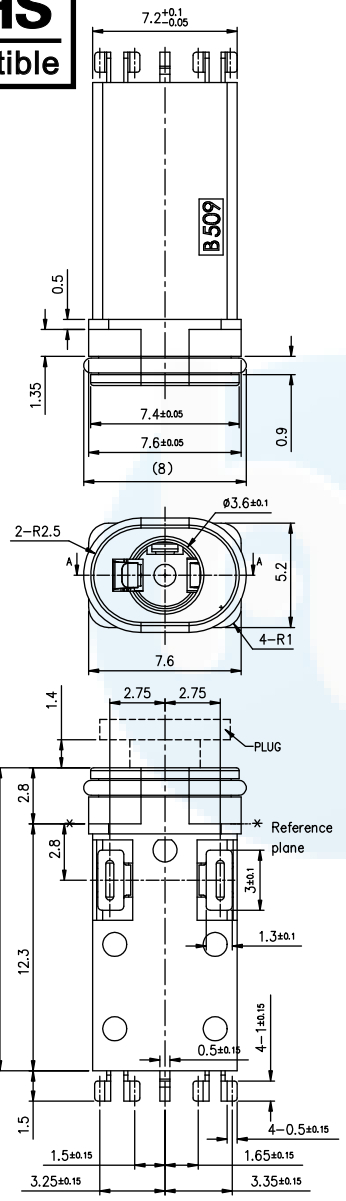

Bottom view

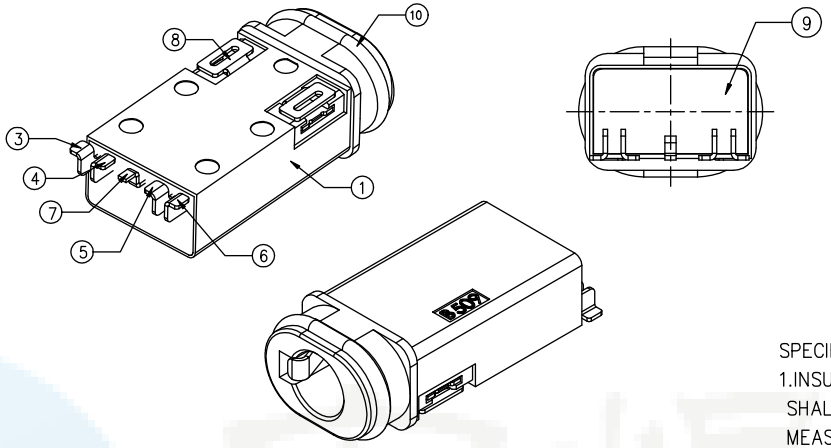

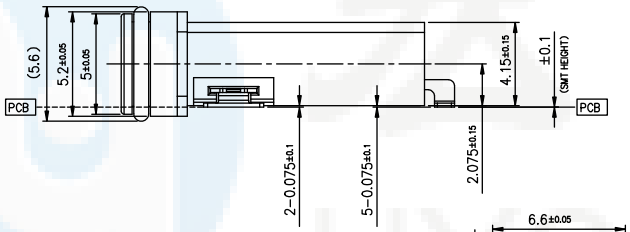

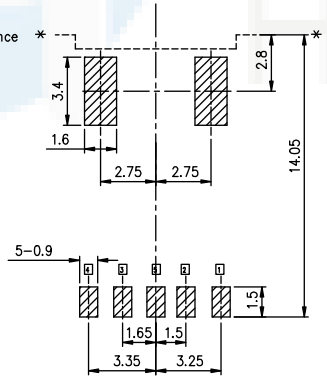

Recommended PCB Layout

Tolerance: ±0.1(Top view)

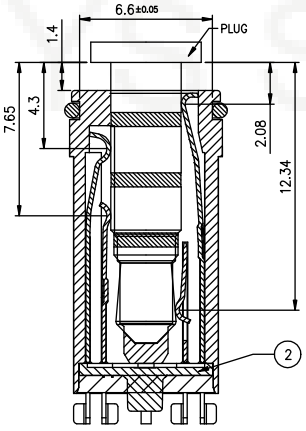

SEC: A-A

Image of plug match with contact point

SCHEMATIC	AFTER PLUG IN
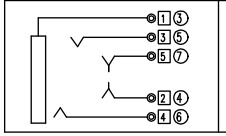	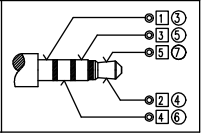

□ : TERMINAL NO. ○ : ITEM NO.

SPECIFIATIONS:

1. INSULATION RESISTANCE: A VOLTAGE OF 500V D.C. SHALL BE APPLIED TO THE TERMINALS, AFTER WHICH MEASUREMENT SHALL BE MADE. A GAUGE FOR THE MEASUREMENT SHALL BE USED THE INSULATEDGAUGE.
2. CONTACT RESISTANCE: 30mΩ OR LESS
3. VOLTAGE PROOF:500V AC FOR ONE MINUTE
4. DURABILITY: 5,000 INSERTION/REMOVAL CYCLES(MINIMUM)
5. INSETION FORCE: 0.3KGF~3.0KGF
6. WITHDRAWAL FORCE: 0.3KGF~3.0KGF
7. WATER PROOFNESS: THIS PRODUCT IS CONFORM TO JIS STANDARD IPX7 BY WATERPROOF JACK
8. USING PLUG: Φ3.5MM、4-POLE STEREO EARPHONE(LCH/RCH/GND/MIC) PROVIDED THAT THEY CONFORM TO JIS C6560
9. O-RING ASSEMBLY AREA TO MAINTAIN SMOOTH, SHALL HAVE NO BURRS

ITEM	PART NAME	TERMINAL	QTY	MATERIAL	REMARK
10	OVAL RING	----	1	----	----
9	BOND	----	1	----	----
8	TERMINAL	----	2	Copper alloy t=0.2	1st:Ni(1μm or more),2nd:Sn(MIN 2μm or more)PLATED
7	TIP SPRING-2	5	1	Copper alloy t=0.2	1st:Ni(1μm or more),2nd:Au(MIN 0.03μm or more)PLATED
6	RING SPRING-2	4	1	Copper alloy t=0.2	1st:Ni(1μm or more),2nd:Au(MIN 0.03μm or more)PLATED
5	RING SPRING-1	3	1	Copper alloy t=0.2	1st:Ni(1μm or more),2nd:Au(MIN 0.03μm or more)PLATED
4	TIP SPRING-1	2	1	Copper alloy t=0.2	1st:Ni(1μm or more),2nd:Au(MIN 0.03μm or more)PLATED
3	EARTH SPRING	1	1	Copper alloy t=0.2	1st:Ni(1μm or more),2nd:Au(MIN 0.03μm or more)PLATED
2	COVER	----	1	PA9T(BLACK)	UL 94V-0
1	HOUSING	----	1	PA9T(BLACK)	UL 94V-0

DESIGN	Li Jinwei	SCALL	
DRAWING	Wu Qifa	UNIT	mm
CHECK	Zheng Jinxian	SIZE	A4: 210 * 297
APPROVAL	Liu Xiaohong	DATE	2020-06-10

TOLERANCE

X.X ±0.30 X.°±2°
.XX ±0.20 .X° ±1°
.XXX ±0.10 .XX°±0.5°

DRAWG NO. PJ-4406F

TITLE: 防水耳机插座 IPX7

东莞市宏煜盛实业有限公司
Dongguan hongyusheng Industry Co., Ltd
TEL: 0769-81230179 https://www.hystypec.com

1. General specification 基本事项

1.1 action : Waterproof earphone socket
种类 : 防水耳机插座
1.2 Switch rating 最大额定值 : DC 12V 0.5A MAX
1.3 Operation temperature range 使用温度试验范围 : - 30~ + 80ºC
1.4 Preservative temperature range 保存温度范围 : - 20~ + 70ºC
1.5 Appearance and dimensions : See outside drawing page
外形及尺寸 : 见外形尺寸图

1.6 General test condition (Tests and measurements shall be made under the following standard conditions unless otherwise specified): 正常测试条件(未有特殊说明量测在以下条件进行)::

Ambient temperature 温度: 5 ~ 35ºC
Relative humidity 相对湿度: 45 ～ 85%RH
Air pressure 气 压: 86 ～ 106kPa(860～1060mbar)

However, if doubt arises on the decision based on the measured Values under the above-mentioned conditions, the following conditions shall be employed:
但是在对判定产生疑义时,按下述状态实施:

Ambient temperature 温 度: 20±2ºC
Relative humidity 相对湿度: 65±5%
Air pressure 气 压: 86 ～ 106kPa(860～1060mbar)

2. Performance 性能

2.1 Electrical characteristics 电气性能

NO.	Item 项目	Test condition 试验 条 件	Performance 规格
2.1.1	Contact resistance 接触电阻	Measured at low current(10mA or less) 在低电流（≦10MA）条件下测试	30MΩ MAX 30MΩ 以下
2.1.2	Insulation resistance 绝缘电阻	Measurement shall be made between adjacent terminals, between terminal and shell(DC 500V) 测试相邻引脚之间，引脚与处壳之间的绝缘阻抗(DC 500V)	100MΩ min 100MΩ 以上
2.1.3	Withstand voltage 耐电压	Apply certain voltage (50Hz , AC 500V) for 1 minute between adjacent contacts of the connector with 0.5mA Leakage sensitivity. 输入一定电压(50Hz ,电压值 AC 500V)1分钟，漏电流为0.5mA ,测试邻近端子间	No. insulation destruction. 无绝缘破坏
2.2 Mechanical Characteristics 机械性能			
2.2.1	Insertion & Extraction Force 插 拔 力	Products mated 3 cycles, fix the species in the force gauge and test the mating force of the connector . 产品插拔三次后,置于插拔力测试计上测试插入力和拔出力.	Insertion & Extraction Force 插 拔 力 See detail drawing page. 见产品图纸

NO.	Item 项目	Test condition 试验 条 件	Performance 规格
2.2.2	Load Strength of Terminal 端子强度	Apply 0.5Kg load to terminal of the connector in any direction for 1 minute. 于连接端子处上方垂直施加0.5Kg的力，持续时间1分钟。	Terminal shall be not broken off, rupture, looseness and other defects. 端子无变形，断裂，等导常。
2.2.3	Conditions for reflow 回流焊焊接	Soldering area: t/2 of P.W.B. thickness (P.W.B:T=1.6) 焊接面积：印刷基板的1/2 厚度处 (P.W.B:T=1.6) Soldering temperature : 250± 5℃ 焊接温度：250± 5℃ soldering time : 3 ±1s 焊接时间：3 ±1 秒 【适用于贴片式产品】	No damage (electrical andmechanical) 无异常。 (电气、机械特性）
2.2.4	Wave-soldering 波峰焊焊接	Terminals shall be dipped in the solder bath at 250±5℃ for 3-5s (seconds without additional force for terminals) 端子焊接部分浸入焊炉，锡炉温度 250±5℃，焊接时间 3-5 秒。（焊接时不可于端子施加外力）。 插件物料手工焊接时需保证烙铁设置温度在 350℃内，焊接时间 3 秒内，烙铁头接触引脚与元件本体距离要求为 2～4MM 之间； 【适用于插件式产品】	No damage (electrical andmechanical) 无异常。 (电气、机械特性）
2.2.5	Solderbility 可悍性	After sprated flux 涂上助焊剂后 temperature :235± 5℃ 温度：235± 5℃ soldering time :2±0.5 sec 焊接时间：2±0.5 秒	90% or more of surface area of the portion immersed in solder shall be covered by new solder 90% 或更多的浸焊面积能被焊锡覆盖.
2.2.6	Shock 耐冲击性	Measure after test at a condition below 在下列条件下进行测试后的量度 Peak acceleration----80G 冲击加速度-80G Test time-6direction ,each 3 times total 18times 测试次数-6 个方向，各3 次共计18 次。 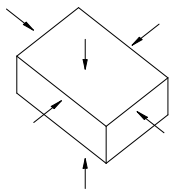	No.2.1 and 2.2.1 to 2.2.2 shall be satisfied 第2.1 及2.2.1—2.2.2 都应符合要求

2.3 **Durability characteristics 耐久性**

NO.	Item 项目	Test condition 试验 条 件	Performance 规格
2.3.1	Endurance (switching) action) 耐久特性（插拔寿命）	Switch shall be operated continuously at 20～50 cycles /5000 times. 插座在寿命试验设备上以 20～50 次 / 分的速度连续被操作,5000 次。	After test, Insulation resistance: 10MΩ Min 实验后： 绝缘电阻：10MΩ Min Insertion & Extraction Force：3～20 N 插拔力：3～20N

2.4 Climatic characteristics 耐候性能

No.	Item 项目	Test condition 试验 条 件	Performance 规格
2.4.1	Cold test 耐寒性	(1) Temperature : - 20±2℃ 温度：- 20±2℃ (2) Duration of test: 96h 持续时间：96 小时 (3) Take off a drop water 去掉水珠 (4) Standard conditions after test : 1h 试验后的放置条件：1 小时	Contact resistance 100 mΩ max No. 2.1.2 to 2.1.4 and No. 2.2.1 to 2.2.2 shall Be satisfied 接触电阻 100 mΩ 以下 满足2.1.2 到2.1.4 项、2.2.1到2.2.2 项.
2.4.2	Heat test 耐热性	(1) Temperature : 70±2℃ 温度： 70±2℃ (2) Duration of test: 96h 持续时间：96 小时 (3) Standard conditions after test : 1h 试验后的放置条件：1 小时	Contact resistance 50mΩ max No. 2.1.2 to 2.1.4 and No. 2.2.1 to 2.2.2 shall Be satisfied 接触电阻 100mΩ以下 满足2.1.2 到2.1.4 项2.2.1到2.2.2 项. .

NO.	Item 项目	Test condition 试验 条 件	Performance 规格
2.4.3	Temperature cycle 温度循环	(1) Test cycles :20 cycles 试验周期：20 个周期 (2) Standard condition after test :1h 试验后的放置条件：1 小时 <table><tr><td></td><td>temperature 温度</td><td>duration of test 持续时间</td></tr><tr><td rowspan="4">1 cycle 一次 循环</td><td>20±5℃</td><td>1h</td></tr><tr><td>-20±2℃</td><td>1h</td></tr><tr><td>20±5℃</td><td>1h</td></tr><tr><td>70±5℃</td><td>1h</td></tr></table>	No damage Electricalandmechanical 无异常 电气、机械性能
2.4.4	Humidity test 耐湿性	(1) Temperature : 40±2℃ 温度：40±2℃ (2) relative humidity: 45~85%RH 相对湿度:45~85%RH (3) Duration of test: 96h 持续时间：96 小时 (3) Take off a drop water 去掉水珠 (4) Standard conditions after test : 1h 试验后的放置条件：1 小时	Contact resistance 50mΩ max No. 2.1.2 to 2.1.4 and No. 2.2.1 to 2.2.2 shall Be satisfied 接触电阻 50mΩ以下 满足2.1.2 到2.1.4 项、2.2.1 到2.2.2 项.
2.4.5	Salt mist Test 盐雾实验 备注：铁材质不做盐雾要求	The switch shall be subjusted to a fime mist of salt solution at a temperature of 35±2℃ for 24H continuously (salt solution concentration 5±1% by weight) 温度: 35±2℃ 浓度: 5±1% 时间: 24H After immersing , salt deposit shall be removed by running water. 试验后，将盐沉积物用水冲掉	No remarkable corrosion shall be recognized in metal parts 在金属件上没有严重腐蚀斑点
2.4.6	Degree of protec tion 防护等级	Accord with GB4208-93 符合GB4208-93	IP X7 Requi rement IP X7 要求

3. Precaution 注意事项 3.1 Soldering condition 浸焊条件

ITEM项目	CONDITION条件
Preheat temperature 预热温度	110ºC max (Embilomental temperature of soldering surface of P. W. E) 110ºC 以下(印刷基板焊锡面周围的温度)
Preheat time 预热时间	60 sec, max 60 秒以内
Area of flux 助焊剂的面积	1/2 max of P. W. B. thickness 印刷基板厚度的 1/2 以内
Temperature of solder 焊锡温度	250ºC max 250ºC 以下
Time of immersion 浸焊时间	Within 3 sec 3 秒以内
Soldering number 浸焊次数	Within 2 times (But should bring down heat of the first soldering) 2 次以内 (但应把第一次焊锡的温度降下来)
Printed wiring board 印刷基板	Single sided copper-clad laminates 单面铜箔

(1) After switches were soldered, please be careful not to clean switches with solvent
插座浸焊后,注意不要用溶剂清洗.

(2) In the case of using soldering iron, soldering conditions shall be 350ºC max and 3 sec. max
在使用铬铁的情况下,焊锡温度应在350ºC 以下、3 秒以内.

(3) Right after switches were soldered; please be careful not to load on the knobs of switches.
浸焊后,注意不要在顶部施加负荷.

3. 2 Design instructions(设计中应注意的事项)

(1) Follow recommended P. W. B. piercing plan in outside drawing page. 印刷基板的安装孔尺寸参见产品图.

(2) Design key top as fig. Design inclination of key top 4 deg. max as fig. (Recommended operating condition.)
击键部设计如图,击键部倾斜度如图在4 度以内. (参见操作条件).

3.3 Note(注意点)

(1) Please be cautious not to give excessive static load or shock to switches.
注意不要施加超负荷的压力或晃动插座.

(2) Please be careful not to pile up P. W. B. after switches were soldered.
插座焊接以后,印刷基板注意不要叠放.

(3) Preservation under high temperature and high humidity or corrosive gas should be avoided especially. When you need to preserve for a long period, do not open the carton.
保管时尤其应注意避开高湿高温和有腐蚀性气体的环境.如需长时间保存,请不要打开包装箱.